2x_antenna_Q_multip_80m long_2007_09_24

Saulius
ncss@splius.lt
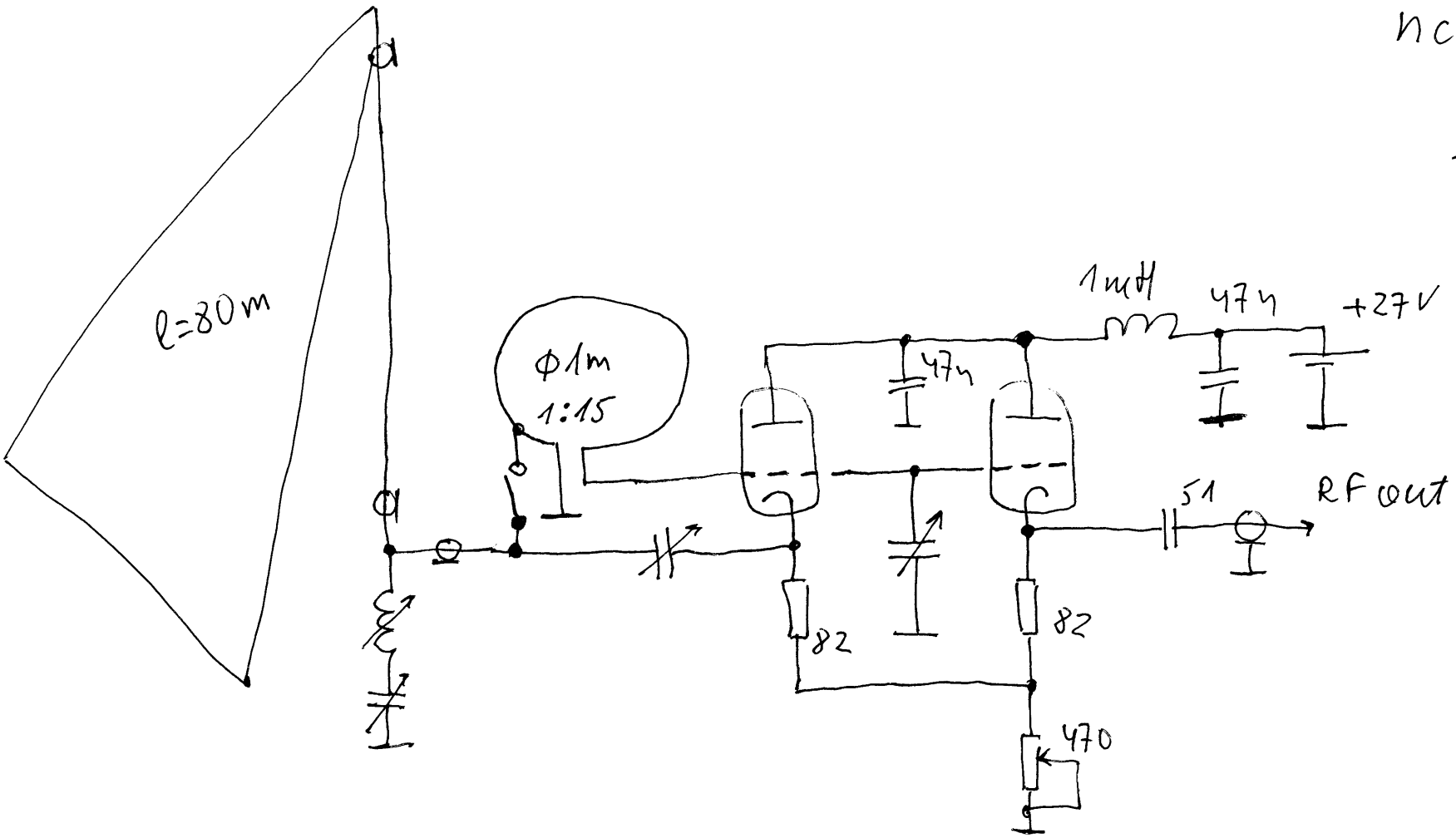
2 x 6C51H-B