Q_multip_combo_2007_10_11

Saulius
ncss@splius.lt
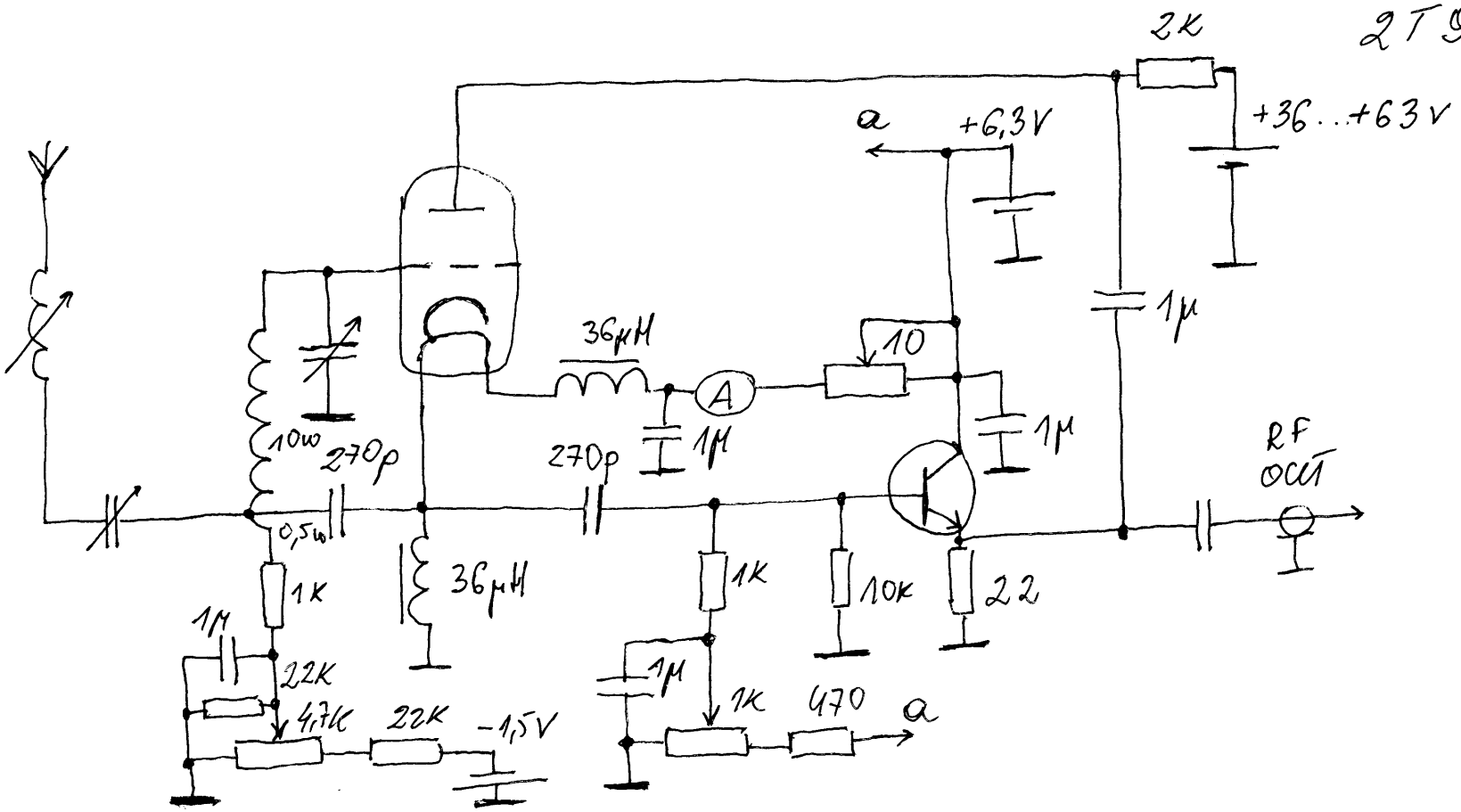
6C17KB
2T904A