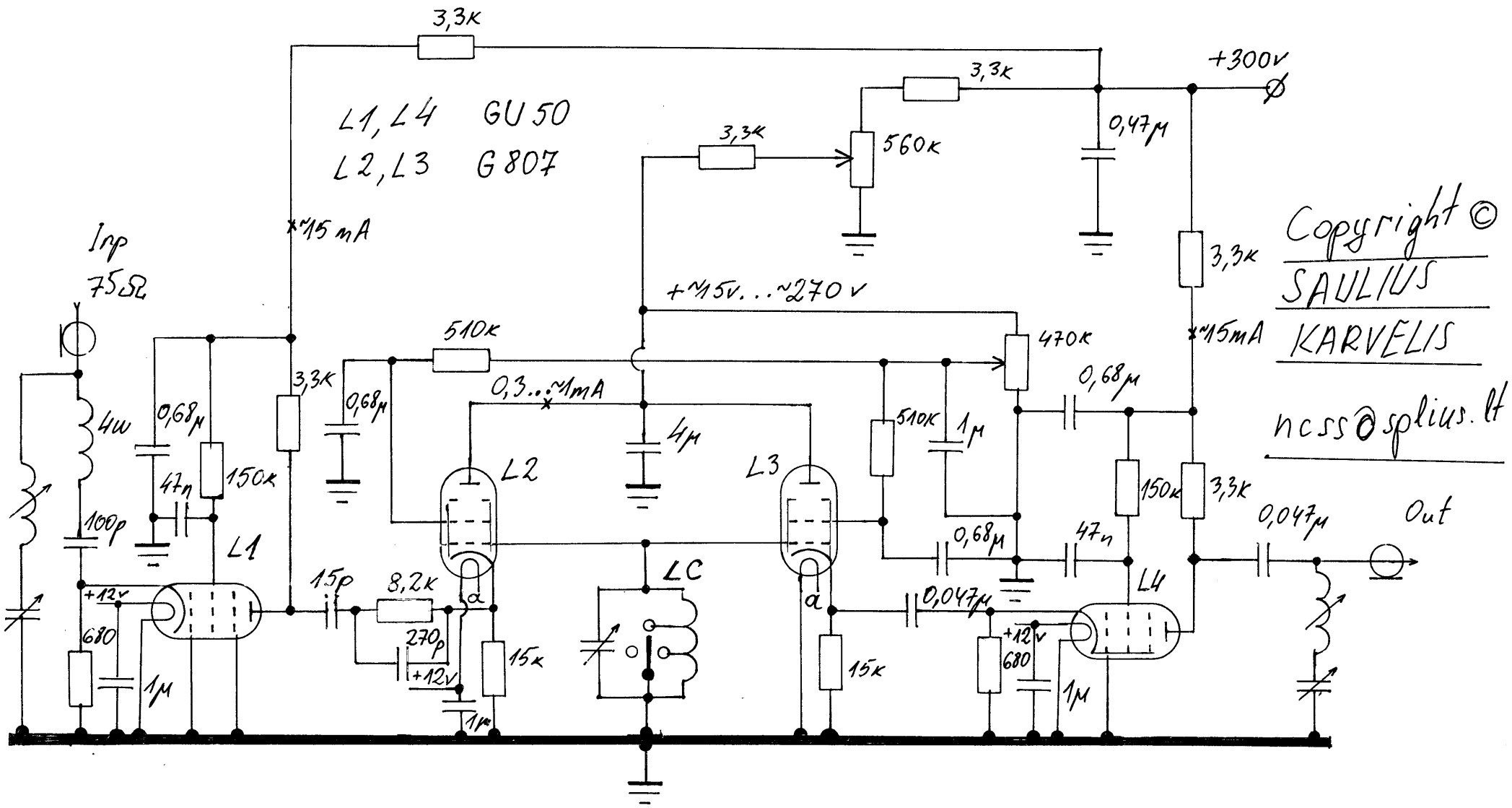SO-Q-Multiplier-RF-Amplifier | V.20070411